Acme Sanitary Ware Co. Ltd.
Since 1949
1/F, Acme Building, 22-28 Nanking Street, Kowloon, Hong Kong
Tel: 2388 7171 Fax: 2710 8012
Email: acme@acmesanitary.com.hk
Website: www.acmesanitary.com.hk

GROHE PROFESSIONAL WORK SMARTER

PROJECT		REF		REV	ITEM CODE	
LOCATION		DATE			PAGE	

SANITARY WARE SPECIFICATION SHEET

Item Descriptions	GROHE (Germany) Infra-red electronic flushing control with manual atuation comprising with soncealed fluching cistern in **AC Supply** ; tested on BSEN997:2012+A1:2015, HTM 64, HBN 00-10 Part C ; Pushing force less than 22N ; test report J25086A ; **3.1/4.6 LPF** in WELS **Grade 1**; Registration No. WC 21-0135 ; complied with BFA 2008
Dimensions	L156 x H197 x D19 mm
Model	37419000 (Actuator) 38661000 (Concealed Cistern) 37102SH0 (Inlet Set)
Finish	Chrome Plated (Actuator)
Manufacturer	GROHE Limited
Supplier	Acme Sanitary Ware Co. Ltd Mr. Eric Wong/ Mr. Wilson Hung
Contact Tel/Fax	(852) 2388-7171 / (852) 2710-8012
E-mail	acme@acmesanitary.com.hk
Website	www.acmesanitary.com.hk

Illustration/ Drawing

Inlet set 37102SH0

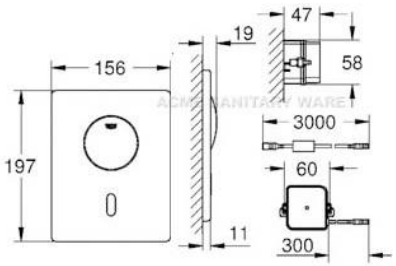

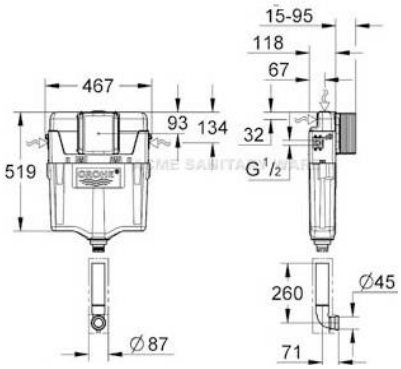

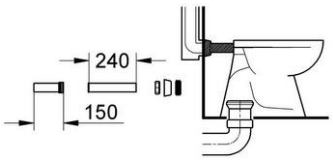

Tectron Skate
infra-red control
with additional manual actuation
for flushing cistern GD 2
GROHE StarLight® chrome finish
concealed installation
CE approved
front plate 156 x 197 mm
hidden fixing screws
push button actuation
for single flush actuation
servo motor
transformer for external installation
operating voltage 230 V AC, 50/60 Hz, 4.0 VA
7 pre-set programs:
with 24/72 hours autoflush
time or user dependent
additional functions by remote control:
adjustable flush (3 - 9 l) by hand and remote
adjustable reflection range by remote
GROHE EcoJoy™ Technology
for less water and perfect flow

Flushing cistern GD 2
6 - 9 l adjustable
adjustment ex factory 6 l and 3 l
pneumatic discharge valve offering 3 modes of operation: dual flush or start/stop or single flush
water supply from left/right/back or top
low noise (group I acc. to German Noise Specification)
insulated against condensation
½" water supply connection including integrated angle valve and push fit flexible hose union
no tools required for the installation of the inspection shaft
including protection during construction phase
for vertical or horizontal use
flush pipe insulated against condensation
fixing brackets
without flush plate/actuation
GROHE EcoJoy technology for less water and perfect flow
for mounting of small flush plates please order revision shaft 40 911 000 (sold separately)
connecting pipe from flush pipe of concealed flush valve 6 to 9l and concealed flushing cistern to pedestal WC connector escutcheon

** All information of the above is for the reference only. No prior notice is made if any changes.*

註冊號碼 (Registration No.)： WC 21-0135

自願參與用水效益標籤計劃 - 水廁
Voluntary Water Efficiency Labelling Scheme - Water Closets

Certificate of Registration 註冊證書

ACME SANITARY WARE CO., LTD. 2388 7171

茲證明
This is to certify that

將下列水廁在本計劃內註冊：
has registered the following water closet under this scheme :

牌　子 / Brand	:	Grohe
型　號 / Model	:	38661000 + 37419XXX + 42320000
種　類 / Category	:	Water Closet Cistern
原產地 / Country or Region Origin	:	Germany (WC Cistern & Flushing Valve)

XXX – denotes the code of colour

在用水效益標籤上展示的標誌 *Symbolic Presentation on the Water Efficiency Label*	:	滴水點 *Water droplet(s)*	
用水效益級別 *Water Efficiency Grade*	:	1	
全沖水量 *Water Flush Volumn (Full)*	:	4.6	公升/沖廁 *litres/flush*
低沖水量 *Water Flush Volumn (Reduced)*	:	3.1	公升/沖廁 *litres/flush*

簽發日期:
Date of Issue: 22 March 2021

水務署
Water Supplies Department

張業駒

水務署署長(張業駒代行)
for Director of Water Supplies

+ 上述水廁具額外節水功能，即：重用洗盥水作沖廁用途。
The above water closet is equipped with additional water saving feature, that is: re-use the water collected from wash basin for flushing purpose.

Acme Sanitary Ware Co. Ltd.
1/F, Acme Building, 22-28 Nanking Street, Kowloon, Hong Kong
Tel: 2388 7171 Fax: 2710 8012
Email: acme@acmesanitary.com.hk
Website: www.acmesanitary.com.hk
Since 1949

GROHE
Pure Freude an Wasser

PROJECT		REF		REV	ITEM CODE	
LOCATION		DATE			PAGE	

SANITARY WARE SPECIFICATION SHEET

Item Descriptions	GROHE (Germany) Plastic single top push flush valve	Illustration/ Drawing
Model	42320000	
Material	Plastic	
Manufacturer	GROHE Limited	
Source	Acme Sanitary Ware Co. Ltd Mr. Eric Wong/ Mr. Wilson Hung	
Contact Tel/Fax E-mail Website	(852) 2388-7171 / (852) 2710-8012 acme@acmesanitary.com.hk www.acmesanitary.com.hk	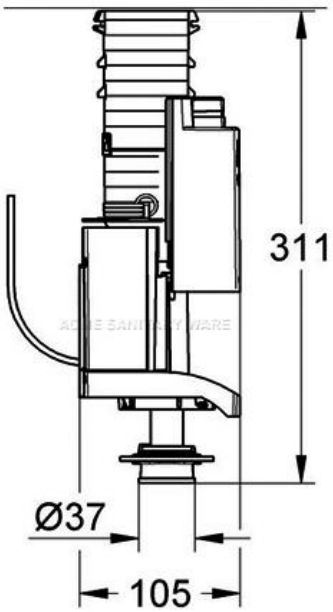

Note:

** All information of the above is for the reference only. No prior notice is made if any changes.*

水務署
Water Supplies Department

總部 Headquarters
灣道七號入境事務大樓 48 樓
Tower, 7 Gloucester Road, Wan Chai, Hong Kong

本署檔號 *Our ref.* : 1/2024 T/J(133/2024)
來函檔號 *Your ref.* :

電話 *Tel.* :
傳真 *Fax.* : 2824 0578

27 February 2024

Approval of "GROHE" Flush Valve
(General Acceptance No. C20240141F)

Your E-Application [file-id: ETJ-GA-20240206-3] dated 6 February 2024 refers.

Having considered the test report ref. J29467 issued on 4 January 2024 by Nutek Systems (HK) Limited; this Authority accepts that the fitting described below complies with, and its use when correctly installed does not contravene, the Waterworks Ordinance and Regulations.

Name of Manufacturer:	Grohe AG
Country of Origin:	Germany
Brand:	Grohe
Details of Fitting:	37mm Plastic dual flush valve
Model:	42320000
Body Markings:	GROHE
Expiry Date:	19 December 2028

Proviso: As the fitting has not been tested for use in contact with water intended for human consumption, the fitting can only be used in flushing water plumbing system.

This Authority hereby permits the use of the above fitting in flushing water plumbing systems subject to full adherence to Waterworks installation requirements. In particular, you are required to draw your customers' attention to the following requirement-

> "The flushing volume of the flushing valve should be adjusted to suit the design of the toilet bowl so that wastes can be cleared effectively by a single flush."
>
> "The fitting should be used within the range of working pressures specified by the manufacturer." AND
>
> "The installed fitting should not result in backflow of water that will contaminate the flushing water supply."

A condition of this acceptance is that the fitting to be installed shall be replicas of the sample as certified by the testing agent mentioned above and without modifications. This acceptance may be withdrawn at any time if the standard of the fitting installed fails to meet that of the approved sample or if the fitting is found to be unsuitable for use in flushing water plumbing systems.

For the use of the fitting in any project, the General Acceptance Number of this letter must be quoted as a means of identification of acceptance of the fitting by this Authority.

Should you have any enquiries, please contact our Engineer Mr Albert CHOW at tel. no. 3583 4086.

Yours faithfully,

(Terry KUNG)
for Director of Water Supplies

Encl.

c.c. WSD 3321/1/82] - without catalogue
ME/MC] - with soft copy only

Acme Sanitary Ware Co. Ltd.
Since 1949
1/F, Acme Building, 22-28 Nanking Street, Kowloon, Hong Kong
Tel: 2388 7171 Fax: 2710 8012
Email: acme@acmesanitary.com.hk
Website: www.acmesanitary.com.hk

GROHE Pure Freude an Wasser

PROJECT		REF		REV	ITEM CODE	
LOCATION		DATE			PAGE	

SANITARY WARE SPECIFICATION SHEET

Item Descriptions	GROHE (Germany) Plastic inlet valve
Model	37095000
Material	Plastic
Manufacturer	GROHE (Germany)
Source	Acme Sanitary Ware Co. Ltd Mr. Eric Wong/ Mr. Wilson Hung
Contact Tel/Fax	(852) 2388-7171 / (852) 2710-8012
E-mail	acme@acmesanitary.com.hk
Website	www.acmesanitary.com.hk

Illustration/ Drawing

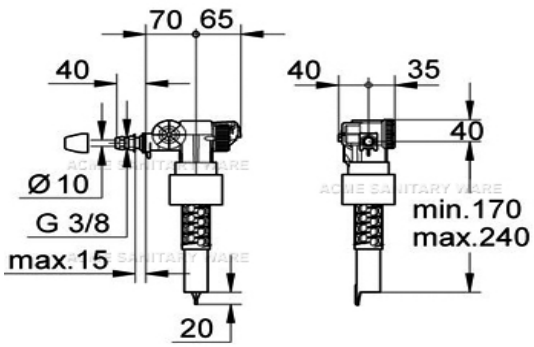

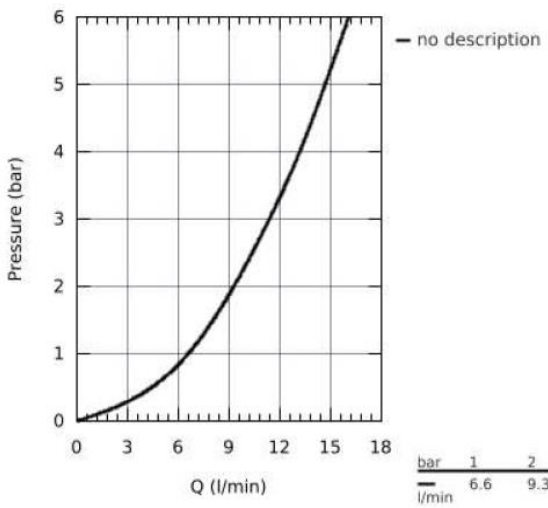

bar	1	2	3	4	5	6
l/min	6.6	9.3	11.4	13.2	14.7	16.1

Note:

** All information of the above is for the reference only. No prior notice is made if any changes.*

水務署
Water Supplies Department

總部 Headquarters
香港灣仔告士打道七號入境事務大樓 48 樓
...ion Tower, 7 Gloucester Road, Wan Chai, Hong Kong

ACME SANITARY WARE CO., LTD. 2388 7171

本署檔號 Our ref. 2... ...020 T/J(1065/2020)
來函檔號 Your ref.

電話 Tel. :
傳真 Fax. : 2824 0578

6 October 2020

Approval of "GROHE" Float Operated Valve
(General Acceptance No. C20200864F)

Your letter ref. WRC/2305 dated 13 August 2020 refers.

Having considered the test report ref. J24281 issued on 30 July 2020 by Nutek Systems (HK) Limited, this Authority accepts that the fitting described below complies with, and its use when correctly installed does not contravene, the Waterworks Ordinance and Regulations.

Name of Manufacturer:	Grohe AG
Country of Origin:	Germany
Brand:	Grohe
Details of Fitting:	3/8" Plastic float operated valve
Model:	37095000
Body Markings:	GROHE
Expiry Date:	2 June 2025

10 years+ 關心服裝 caringorganisation

Proviso: As the fitting has not been tested for use in contact with water intended for human consumption, the fitting can only be used in flushing water plumbing system.

This Authority hereby permits the use of the above fitting in flushing water plumbing systems subject to full adherence to Waterworks installation requirements. In particular, you are required to draw your customers' attention to the following requirement-

"The flushing volume of the flushing valve should be adjusted to suit the design of the toilet bowl so that wastes can be cleared effectively by a single flush."

"The fitting should be used within the range of working pressures specified by the manufacturer." AND

"The installed fitting should not result in backflow of water that will contaminate the flushing water supply."

A condition of this acceptance is that the fitting to be installed shall be replicas of the sample as certified by the testing agent mentioned above and without modifications. This acceptance may be withdrawn at any time if the standard of the fitting installed fails to meet that of the approved sample or if the fitting is found to be unsuitable for use in flushing water plumbing systems.

For the use of the fitting in any project, the General Acceptance Number of this letter must be quoted as a means of identification of acceptance of the fitting by this Authority.

Should you have any enquiries, please contact our Engineer Mr. Terry KUNG at tel. no. 3583 4086.

Yours faithfully,

(CHAN Chung-kun)

for Director of Water Supplies

Encl.

c.c. WSD 3321/1/82] - without catalogue
ME/MC] - with soft copy only

NUTEK

Nutek Systems
I certify this to be a true copy of the original document
Date : 10 DEC 2020
Signed: .....
Wong Yee Ling

Test Report

Test
Title : Testing of WC
Method : BS EN 997: 2012 + A1: 2015; Health Technical Memorandum(HTM) 64; Health Building Note (HBN) 00-10 Part C: Sanitary Assembilies & Barrier Free Access 2008
Report No. : J 25086A
Completion : 04 Feb., 2020

Applicant (Information provided by client)
Name :
Address :

ACME SANITARY WARE CO., LTD. * VLL 2388

Sample (Information provided by client)
Description : Water Closet Cistern

	Cistern	Flush Valve
Brand :	GROHE	GROHE
Model :	38661000 + 37419XXX (XXX denotes colour variants)	42320000
Body Marking :	GROHE	GROHE
Manufacturer :	Grohe AG	Grohe AG
Origin :	Germany	Germany

Approved Signatory

Signature : K. K. Hing
Name (title) : Hing Kah Kuin (Engineer)
Date : 07 Dec., 2020

Nutek Systems is a testing agency, accepted by the Water Supplies Department, for testing water supply fittings.

NUTEK SYSTEMS (HK) LIMITED
13/F, Block A, Universal Industrial Centre, 23-25 Shan Mei Street, Fo Tan, New Territories, Hong Kong
Tel.: +852 2605 5736 | Fax: +852 2692 0798 | info@nuteksystems.com | www.nuteksystems.com

NUTEK

Nutek Systems
I certify this to be a true copy of the original document
Date : 10 DEC 2020
Signed: .....

REPORT NO.: J 25086A

Summary

Test	Remark
1 Flush Volume and Rate	C
2 Pushing Force for Flushing Controls	C

Notes:

1. The sample complies with Health Technical Memorandum(HTM
2. The sample complies with Health Building Note (HBN) 00-10 Part ary

ACME SANITARY WARE CO., LTD. 2388 1171

Results (apply only to samples tested)

1 Flush Volume and Rate

BS EN 997: 2012 + A1: 2015 Cl. 6.5.1, 6.5.2, 6.6, 6.17.3 & 6.17.4

ID	Variable	Unit	Measured	Required	Remark
1	Flush Volume (Full)	l	4.6	≤ 6.0	C
	Flush Volume (Reduced)		3.1	≤ 3.1	C
2	Flush duration (Full)	s	1.92	N	N
	Flush Duration (Reduced)		0.90	N	N
3	Flush Rate (Full)	l/s	1.88	≥ 1.85	C
	Flush Rate (Reduced)		1.78	≥ 1.6	C
Overall result					C

2 Pushing Force for Flushing Controls

Barrier Free Access 2008 Chapter 4 Cl. 50

ID	Variable	Unit	Measured	Required	Remark
1	Full Flush	N	17.0	< 22	C
	Reduced Flush		21.0	< 22	C
Overall result					C

NUTEK SYSTEMS (HK) LIMITED
13/F, Block A, Universal Industrial Centre, 23-25 Shan Mei Street, Fo Tan, New Territories, Hong Kong
Tel.: +852 2605 5736 | Fax: +852 2692 0798 | info@nuteksystems.com | www.nuteksystems.com

Nutek Systems
I certify this to be a true copy of the original document
Date : 10 DEC 2020
Signed: .....

Figure 1 - Sample

General Note(s)

Definitions:

C - conformance
N - no requirement
NC - non-conformance
R - remainder

Organizations:

HKAS - Hong Kong Accreditation Service
HOKLAS - Hong Kong Laboratory Accreditation Scheme
WSD - Water Supplies Department (of Hong Kong)
WHO - World Health Organization

- End of report -

NUTEK SYSTEMS (HK) LIMITED
13/F, Block A, Universal Industrial Centre, 23-25 Shan Mei Street, Fo Tan, New Territories, Hong Kong
Tel.: +852 2605 5736 | Fax: +852 2692 0798 | info@nuteksystems.com | www.nuteksystems.com